Department of Mechanical and Aerospace Engineering
POLITECNICO DI TORINO
PhD Mechanical Engineering – Cycle 34

LAQ-AERMEC LABORATORY

Experimental Investigation and Numerical Modeling Of Non-Linear Structural Dynamics of Shrouded Turbine Blades

PhD Student: Rizwan Ahmed

Supervisors: Prof. Stefano Zucca
Prof. Christian Maria Firrone

INTRODUCTION

- High static loads caused by centrifugal forces and oscillating forces of the working fluid resulting in forced vibrations
- Need to estimate and reduce the vibration amplitudes to avoid high cycle fatigue (HCF)
- Friction damping - effective damping, simpler structure, reliable adaptability
- Examples: Under-platform dampers, Shrouds, Snubber
- Large relative displacement at the contacts lead to stick-slip transitions and consequently to energy dissipation
- Contact models implemented in nonlinear solvers for forced response analysis
- Validation of contact models – direct contact force measurement is required

RESEARCH THEME

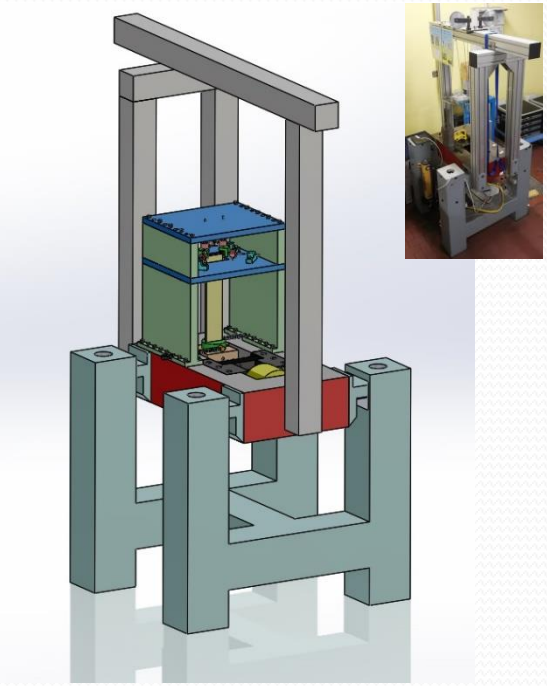

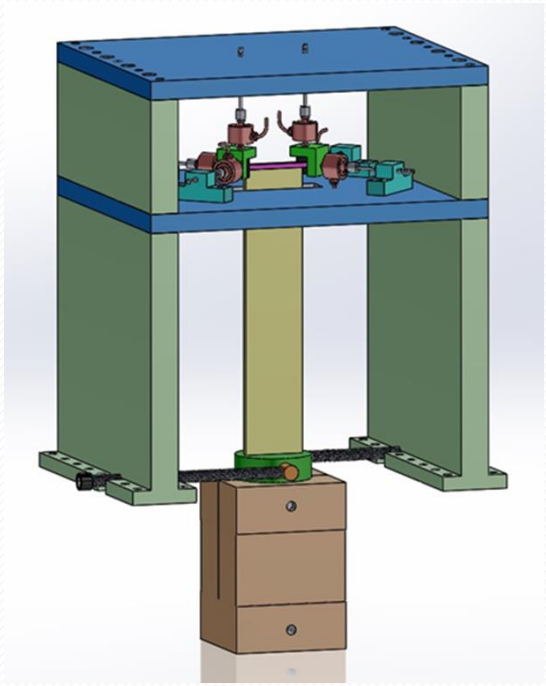

- Design and development of a test rig for shrouded blade dynamics to collect experimental database.
- Validation of numerical models developed for nonlinear forced response and contact force calculation

EXPERIMENTAL TEST RIG

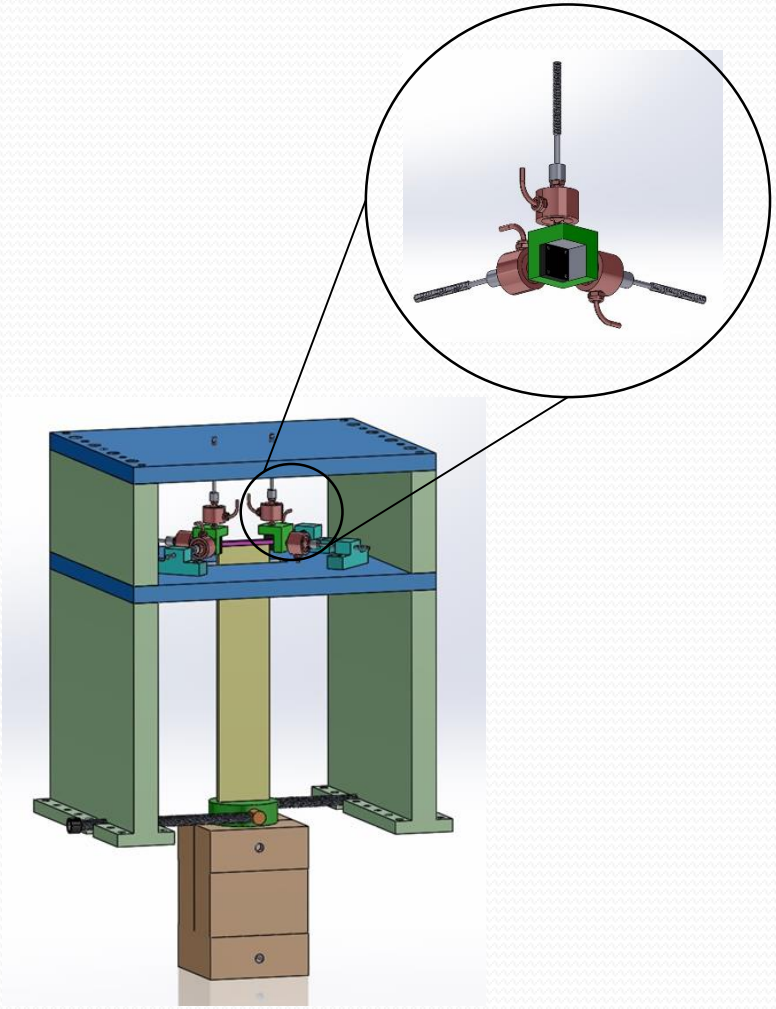

Salient Features:

- Application of normal/preload by torque screw mechanism incorporated with a pin through base
- Tri-directional contact force measurement system where force sensors measure contact forces on the shroud in three directions simultaneously

TRI-DIRECTIONAL CONTACT FORCE MEASUREMENT SYSTEM

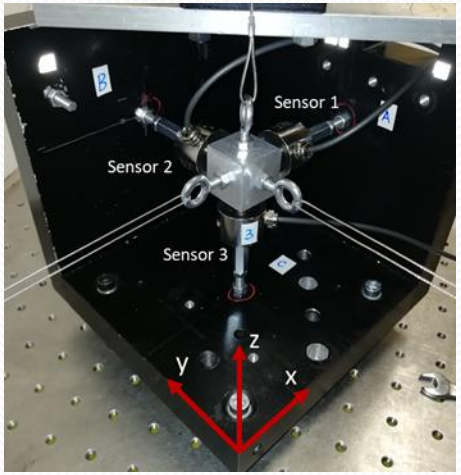

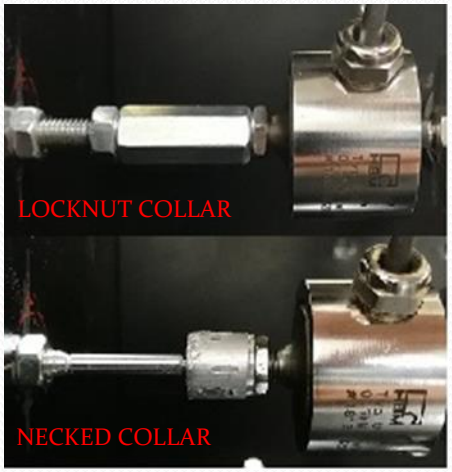

- For measurement of contact forces at blade shrouds
- Three uniaxial force sensors assembled in a tri-pod configuration with three mutually orthogonal branches
- Each branch included a force sensor and a collar link. Sensor connected to a common reference block and collar link connected to a wall.
- Strain gauge sensors used considering both the static and the dynamics components of the contact forces
- Two different collar links tested to assess their effect on the mechanical coupling of the three branches and on the measurement accuracy.

Ahmed, R., Firrone, C.M., Zucca, S., Design and Calibration of a Tri-directional Contact Force Measurement System
BSSM's 15th International Conference on Advances in Experimental Mechanics, Sept 2020 - *Conference Postponed to Sept 2021*

TRI-DIRECTIONAL CONTACT FORCE MEASUREMENT SYSTEM

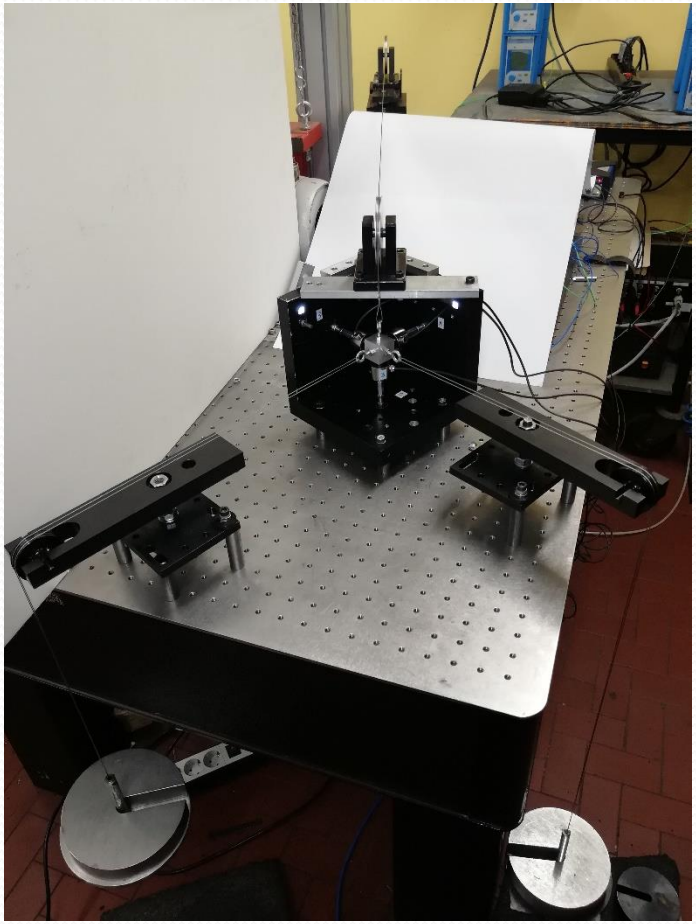

Calibration process

- Linear relationship between the measured force values $\{F^*\} = (F_1, F_2, F_3)^T$ and actual applied loads $\{F\} = (F_x, F_y, F_z)^T$ can be expressed as:

$$\{F^*\} = [C]\,\{F\}$$

- Determination of calibration matrix [C]

Validation Process

- Application of known loads in three orthogonal directions simultaneously
- Computation of decoupled applied forces
- $\{F\} = [C]^{-1}\{F^*\} = [D]\,\{F^*\}$
- [D] - Decoupling matrix
- Comparison with actual applied forces

TRI-DIRECTIONAL CONTACT FORCE MEASUREMENT SYSTEM

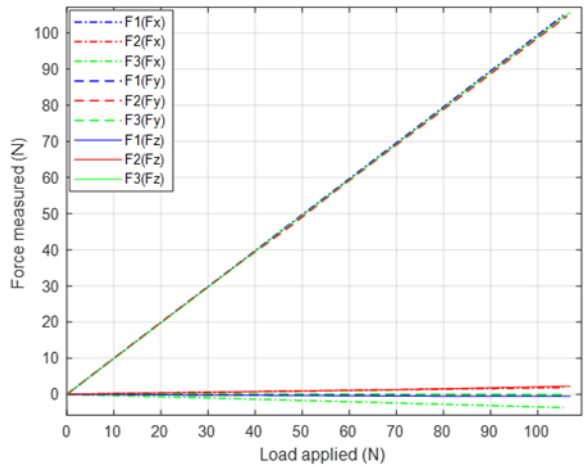

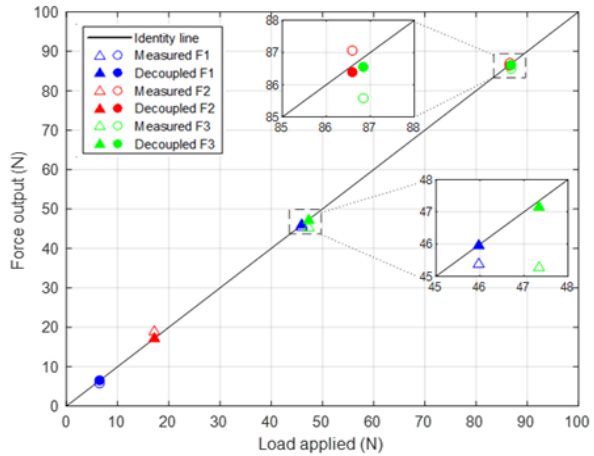

Results

- *Calibration test*
- Linear response
- Existence of a residual coupling
- Error of up to 4.4% in case of locknut collar and up to 2% for necked collar
- *Simultaneous loading test*
- Coupling error reduced by decoupling matrix
- Computation of decoupled applied forces in three orthogonal directions within 2% of their actual values

EXPERIMENTAL VS FE MODAL ANALYSIS

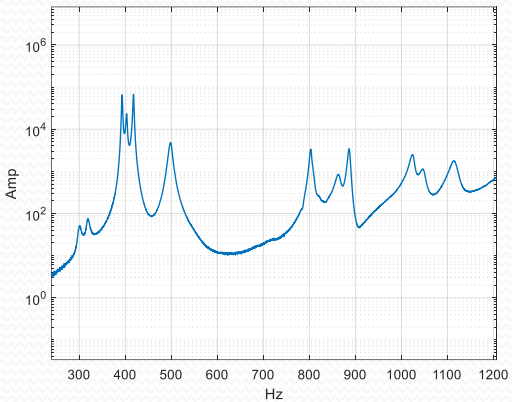

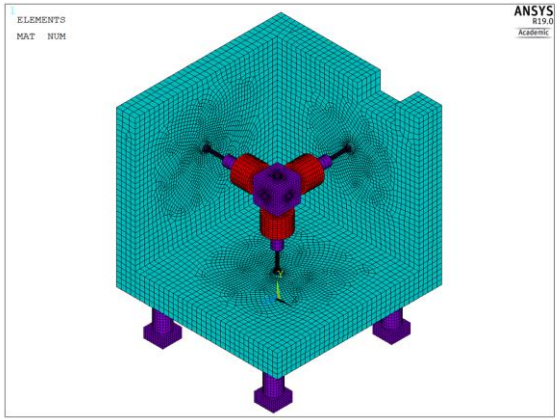

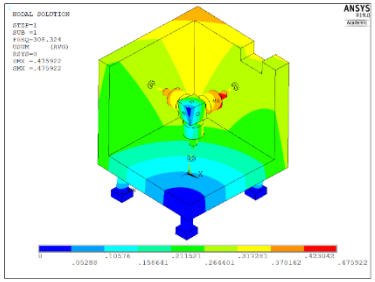

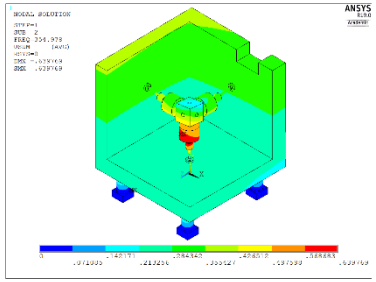

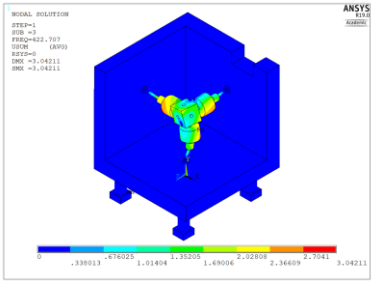

- Objective: Estimation of sensor's stiffness for an accurate model of the frame for the computation of nonlinear forced response
- Experimental determination of natural frequencies by impact testing
- Comparison of the mode shapes and natural frequencies obtained by experimental modal analysis with FE modal analysis
- Tuning the FE modal analysis to obtain an approximate value of sensor's stiffness

FE MODAL ANALYSIS OF TEST RIG

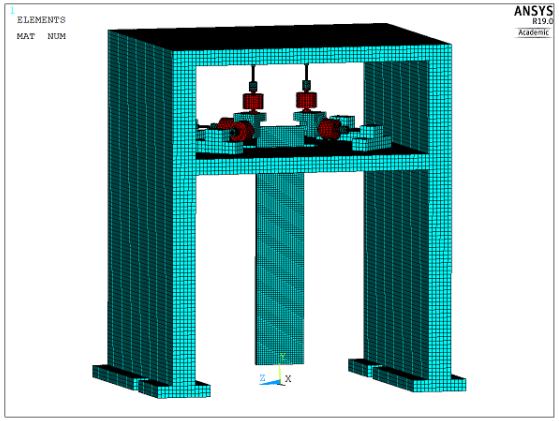

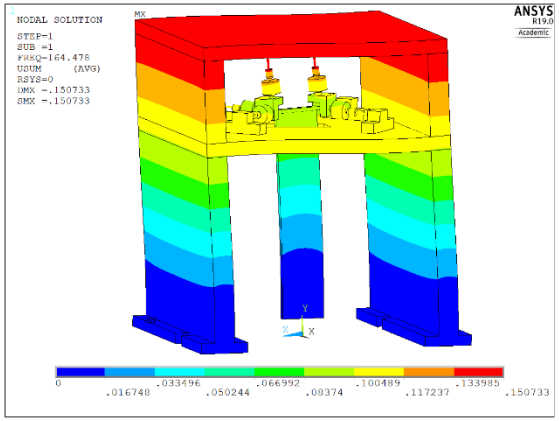

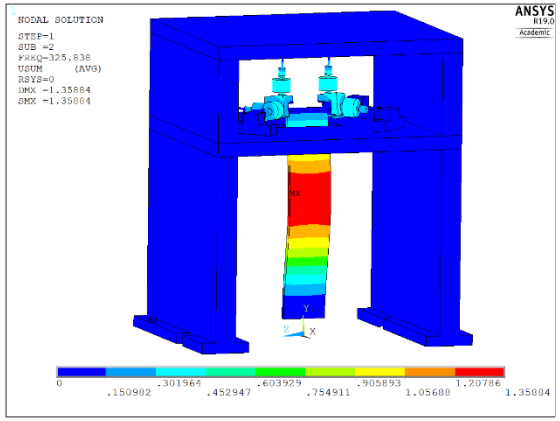

- Natural Frequencies and mode shapes with displacement constraints and different contact conditions were obtained

- Design Optimization involving design parameters:
  - Thickness of the frame walls, top plate, midplate and necked collar link
  - Thickness of the blade and shroud angle

- Prevention of natural frequencies overlapping and specifying the working frequency range

FUTURE WORK

Manufacturing of the components of experimental rig

Modal testing of test setup and comparison with FE modal analysis

Definition of experimental procedure and data processing steps

Full Experimental Campaign
(Simultaneous Tri-directional Forced response and Contact forces)

Numerical Forced Response of Shrouded Blade

Experimental Validation of numerical model

THANK YOU